Cavallini S.r.l.
Dress up your Luxury Project
Prodotti per Legatoria - Cartotecnica - Arti Grafiche
Saldatori Plastici Campionaristi Scatolifici

**Registered Office**: 20138 Milan - Via M.F Quintiliano, 2/4
**Administrative Offices**: 20138 Milan - Via Salomone, 43
T.+39(02)58.012.660-58.011.069 F.+39(02)50.633.14
Share Capital € 100.000 i.v. – REA MI 1252539
VAT No. 08837680159

**www.cavalliniring.it** - vendite@cavalliniring.it
Certified Email PEC: cavallinisrl@ticertifica.it

**"Since 1987… Quality & Service"**

# RIVET POST 3

DESCRIPTION
Flat head male rivet available in nickel-plated (LMT0604), brass-plated (LMT0659) and black (LMT0634) finishes. Installation requires a pre-punched hole. This fastening system is designed to join two or more layers of different materials, primarily in the leather goods, clothing, footwear and paper converting industries. The rivet can also be used for decorative and design purposes.

TECHNICAL SPECIFICATIONS
Material: Cold-rolled steel, brass
Head diameter (T): 75
Diameter (D): 29
Height (H): 80
Measurements are expressed in tenths of a millimetre.

PRODUCT IMAGE

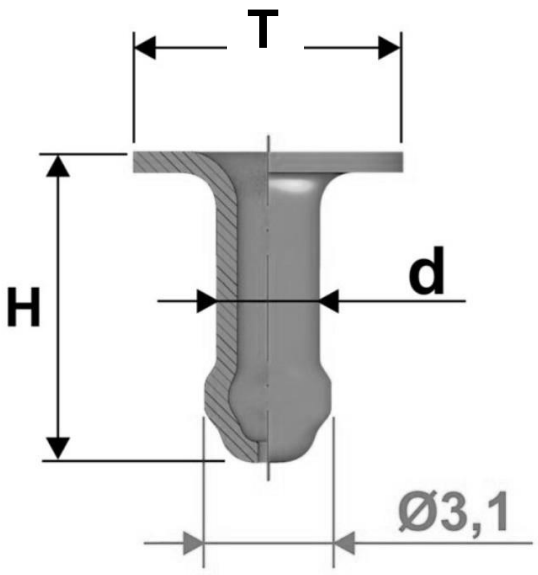


Discover our FSC® certified products

Only the products that are identified as such on this document are FSC® certified