Cavallini S.r.l.
Dress up your Luxury Project
Prodotti per Legatoria - Cartotecnica - Arti Grafiche
Saldatori Plastici Campionaristi Scatolifici

Registered Office: 20138 Milan - Via M.F Quintiliano, 2/4
Administrative Offices: 20138 Milan - Via Salomone, 43
T.+39(02)58.012.660-58.011.069 F.+39(02)50.633.14
Share Capital € 100.000 i.v. – REA MI 1252539
VAT No. 08837680159

www.cavalliniring.it - vendite@cavalliniring.it
Certified Email PEC: cavallinisrl@ticertifica.it

"Since 1987… Quality & Service"

DOMED HEAD FEMALE RIVET 3

DESCRIPTION
Domed head female rivet available in nickel-plated (LMT0603), brass-plated (LMT0658) and black (LMT0633) finishes. Installation requires a pre-punched hole. This fastening system is designed to join two or more layers of different materials, primarily in the leather goods, clothing, footwear and paper converting industries. The rivet can also be used for decorative and design purposes.

TECHNICAL SPECIFICATIONS
Material: Cold-rolled steel, brass
Head diameter (T): 70
Diameter (D): 38
Height (H): 30
Measurements are expressed in tenths of a millimetre.

PRODUCT IMAGE

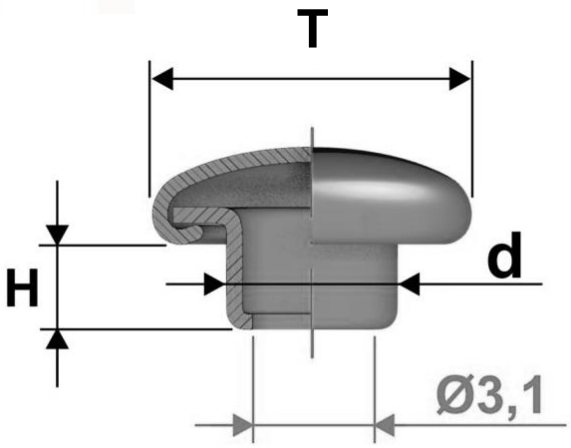

Discover our FSC® certified products

Only the products that are identified as such on this document are FSC® certified