Cavallini S.r.l.
Dress up your Luxury Project
Prodotti per Legatoria - Cartotecnica - Arti Grafiche
Saldatori Plastici Campionaristi Scatolifici

Registered Office: 20138 Milan - Via M.F Quintiliano, 2/4
Administrative Offices: 20138 Milan - Via Salomone, 43
T.+39(02)58.012.660-58.011.069 F.+39(02)50.633.14
Share Capital € 100.000 i.v. – REA MI 1252539
VAT No. 08837680159

www.cavalliniring.it - vendite@cavalliniring.it
Certified Email PEC: cavallinisrl@ticertifica.it

"Since 1987… Quality & Service"

HEAD FEMALE RIVET 116

DESCRIPTION
Nickel-plated domed head female rivet. Installation requires a pre-punched hole. This fastening system is designed to join two or more layers of different materials, primarily in the leather goods, clothing, footwear and paper converting industries. The rivet can also be used for decorative and design purposes.

TECHNICAL SPECIFICATIONS
Material: Cold-rolled steel
Head diameter (T): 110
Diameter (D): 38
Height (H): 30
Measurements are expressed in tenths of a millimetre.

PRODUCT IMAGE

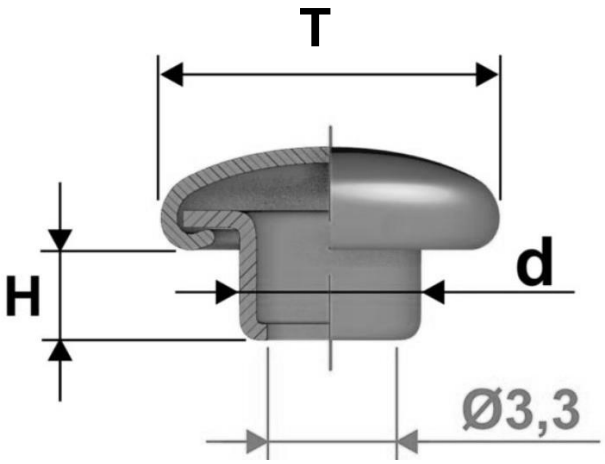

Discover our FSC® certified products

Only the products that are identified as such on this document are FSC® certified